WALL VENT

HOODED WALL VENT WITH SPRING LOADED DAMPER, GASKET, AND SCREEN- WVE4_

WVE4				
ITEM #	**GALVANIZED**	**ALUMINUM**	**BROWN**	**BLACK**
WVE4_	WVE4	WVE4A	WVE4BR	WVE4BK

- Exhaust side wall or eaves
- Equipped with a screen, damper, and gasket
- Available in the 4” model only
- Large hood design prevents restricted air flow
- Available in aluminum, galvanized, and painted metals

FRESH AIR MANUFACTURING CO.
Technologies in Ventilation
*649 N. Ralstin St., Meridian, ID 83642 * (208)884-8931 * (800)-234-1903 * FAX: (208)884-8943*

WALL VENT

HOODED WALL VENT WITH SPRING LOADED DAMPER, GASKET, AND SCREEN- WVE4_

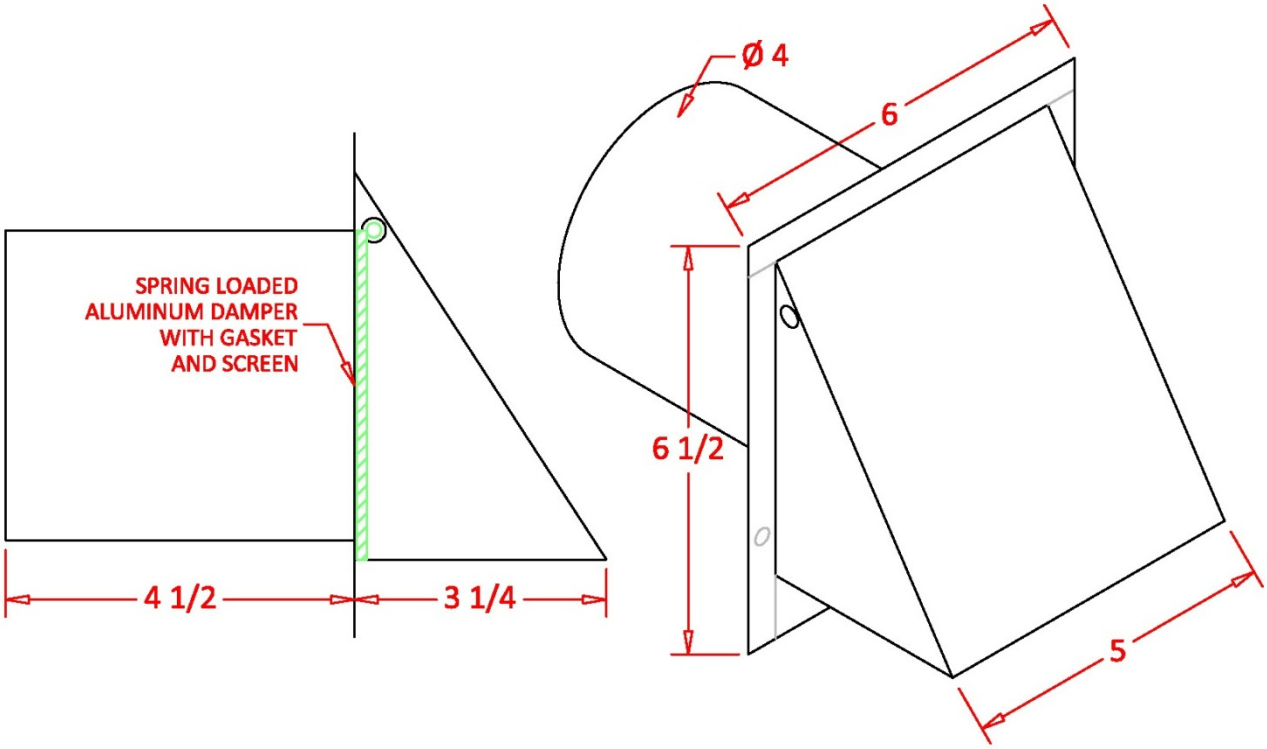

- Equipped with a screen, damper, and gasket
- Available in the 4” model only
- Large hood design prevents restricted air flow
- Available in aluminum, galvanized, and pre-painted metals

FRESH AIR MANUFACTURING CO.
Technologies in Ventilation
*649 N. Ralstin St., Meridian, ID 83642 * (208)884-8931 * (800)-234-1903 * FAX: (208)884-8943*